文件資料管制 文件資料管制 文件資料管制

REF. ID.	PIN NO.	SIGNAL	WIRE COLOR	GAUGE	CONNECTOR TYPE	CABLE LENGTH
P1	1	+3.3VDC	ORANGE	18	C4202H02-A4P+, C4202H02-A20P+ or EQUIV.	300±15mm
	2	+3.3VDC	ORANGE	18		
	3	COM	BLACK	18		
	4	+5VDC	RED	18		
	5	COM	BLACK	18		
	6	+5VDC	RED	18		
	7	COM	BLACK	18		
	8	PW-OK	GRAY	24		
	9	+5Vsb	PURPLE	20		
	10	+12V1	YELLOW	18		
	11	+12V1	YELLOW	18		
	12	+3.3VDC	ORANGE	18		
	13	+3.3VDC	ORANGE	18		
		+3.3VSense	BROWN	24		
	14	-12VDC	BLUE	24		
	15	COM	BLACK	18		
	16	PS-ON	GREEN	24		
	17	COM	BLACK	18		
	18	COM	BLACK	18		
	19	COM	BLACK	18		
	20					
	21	+5VDC	RED	18		
	22	+5VDC	RED	18		
	23	+5VDC	RED	18		
	24	COM	BLACK	18		
PA	1	+3.3V	ORANGE	18	MOLEX CL1271HS0 15P or EQUIV.	300±15mm
	2	COM	BLACK	18		
	3	+5V	RED	18		
	4	COM	BLACK	18		
	5	+12V1	YELLOW	18		
PB	1	+3.3V	ORANGE	18	MOLEX CL1270H00 15P or EQUIV.	170±10mm
	2	COM	BLACK	18		
	3	+5V	RED	18		
	4	COM	BLACK	18		
	5	+12V1	YELLOW	18		
P2	1	COM	BLACK	18	MOLEX 39-01-2040 or EQUIV.	300±15mm
	2	COM	BLACK	18		
	3	+12V2	YEL/BLK	18		
	4	+12V2	YEL/BLK	18		
P3 P5	1	+12V1	YELLOW	18	MOLEX 1-480424-0 or EQUIV.	300±15mm
	2	COM	BLACK	18		
	3	COM	BLACK	18		
	4	+5V	RED	18		
P4	1	+12V1	YELLOW	18	MOLEX 1-480424-0 or EQUIV.	170±10mm
	2	COM	BLACK	18		
	3	COM	BLACK	18		
	4	+5V	RED	18		
P6	1	+5V	RED	20	MOLEX 171822-4 or EQUIV.	170±10mm
	2	COM	BLACK	20		
	3	COM	BLACK	20		
	4	+12V1	YELLOW	20		

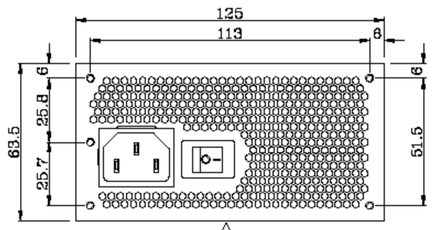

AIR FLOW

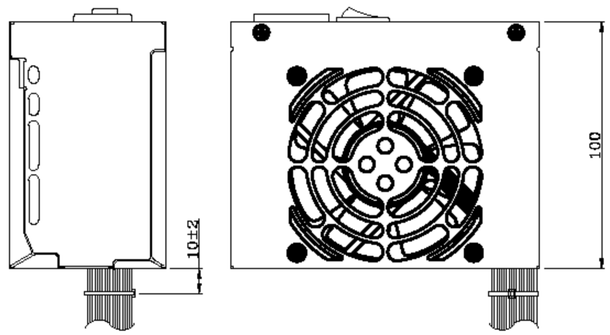

AIR FLOW

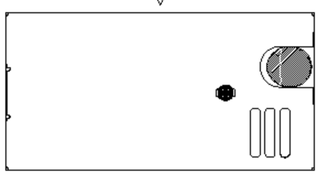

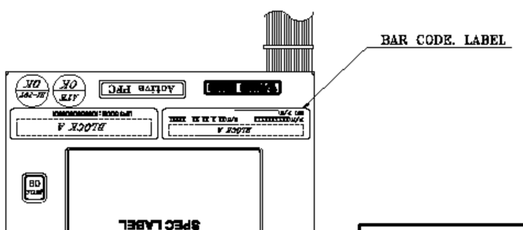

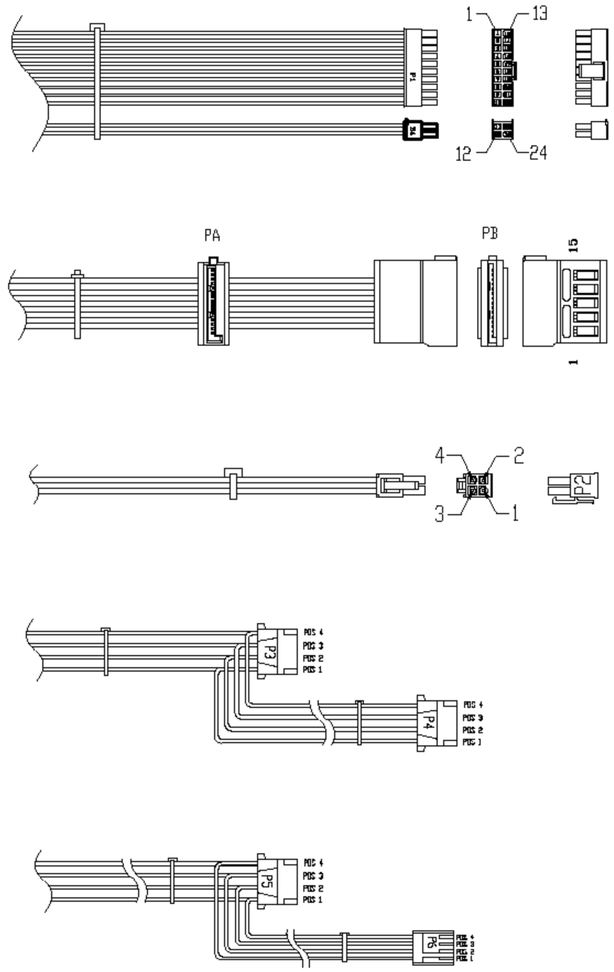

NOTE:

1. ALL THE LENGTH OF OUTPUT WIRES EXCLUDE HOUSING.
2. *產地標籤依業務指示加貼.*

UNIT:mm

P/N.:9PA300A345

UPC CODE:677808611228

SPI P/N:SPI300GLS-B204

MODEL NO. : SPI300GLS(80)(S03003)		TITLE: ASSY			SHEET: 1 OF 1	REV:02
R&D(8)	PE	CHECKED	DESIGN	DRAWN	DATE	
				趙時林	MAY.26.2008	
INTERIOR COUNTERSIGN:						

發行時間：2008/5/26 6:45 下午
OAD080242 05-R2.pdf
1 / 1禁止翻印外洩